①

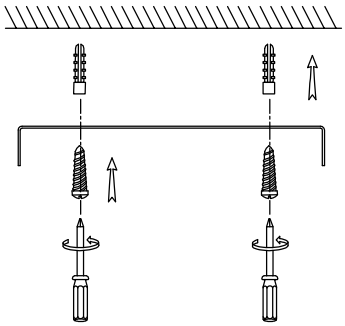

②

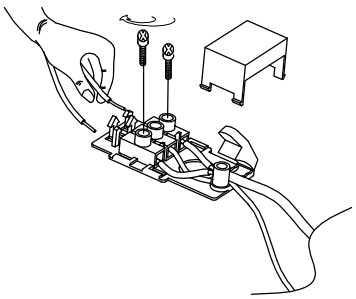

③

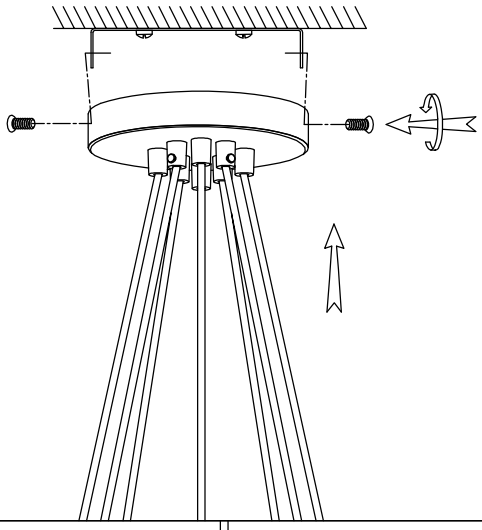

④

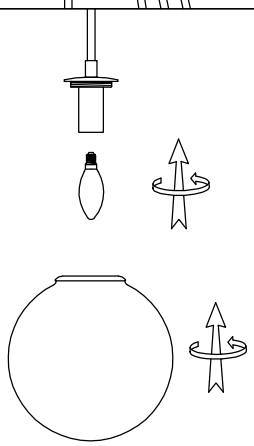

KG0838P-6

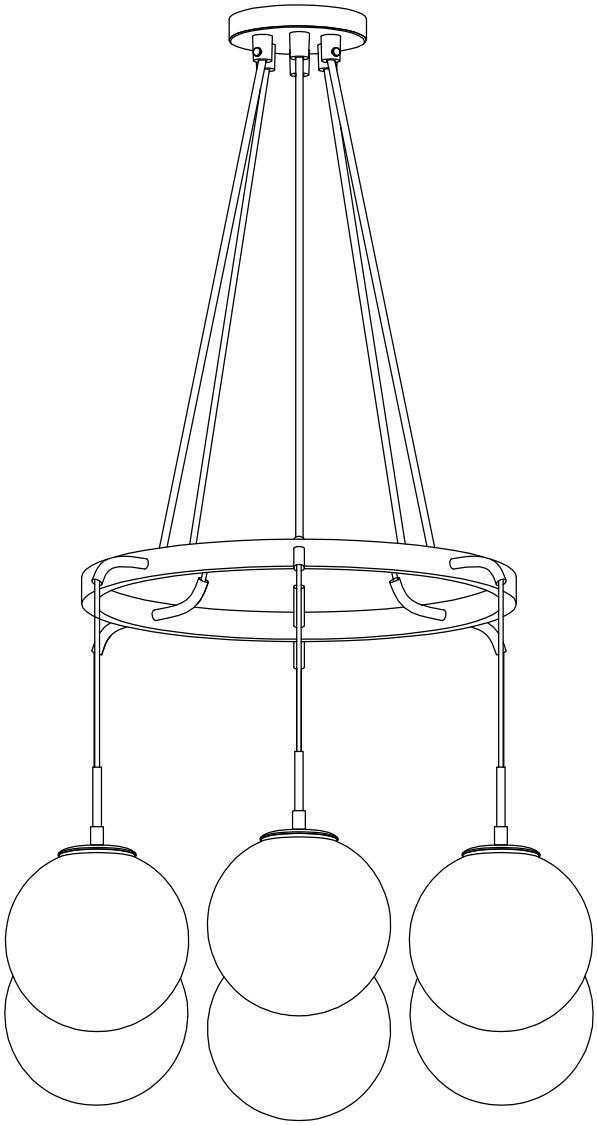

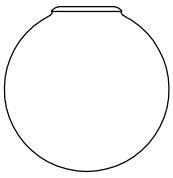

— 6 pcs